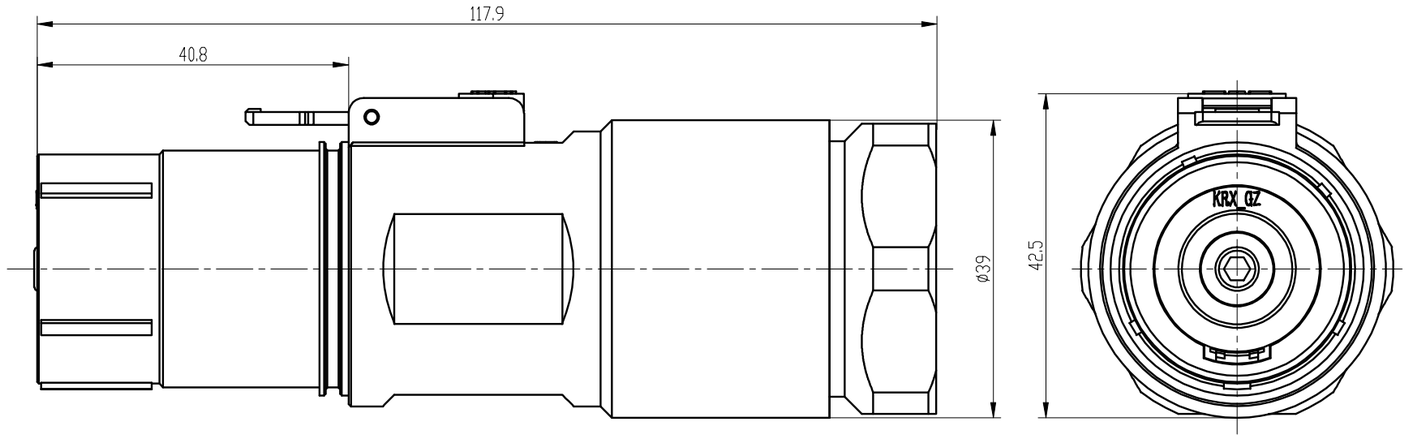

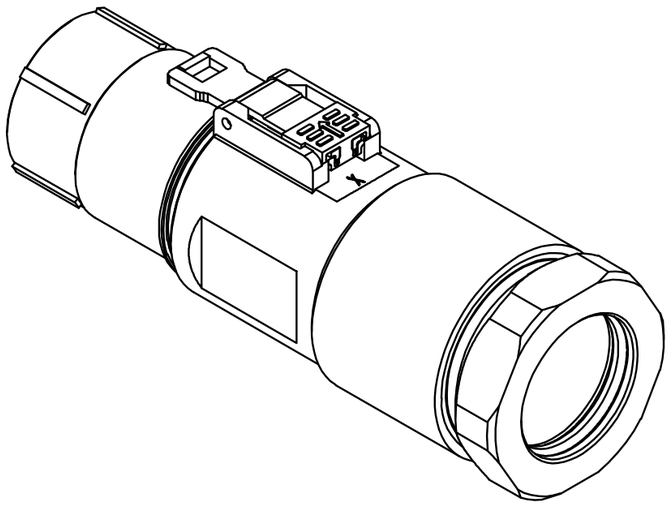

KRX 18 X - 50 0 -95
① ② ③ ④⑤ ⑥

① Master code: KRX
② Product type: 18 is 180° straight plug, 28 is 90° plug
③ Positions: X, Y, U, V, W
④ Rated current: 50--500A
⑤ HVIL: 1 is Yes, 0 is No
⑥Wire Range: 95 mm2, 120 mm2, 135 mm2 .150mm2

Specifications
1、Temperature : -55℃ ~+125℃
2、Rated Current: 500A
3、Withstand Voltage: 5000V DC
4、Rated Voltage：1500V DC
5、Ingress Protection: IP67
6、Mechanical Life: 500 times
7、Shielded Function:Yes
8、HVIL Function：Yes

				KRX18*-50*-**	KRX_GZ